Back to Content

DENISON HYDRAULICS
high performance hydraulic
new vane motor
series M5B - M5BS - M5BF

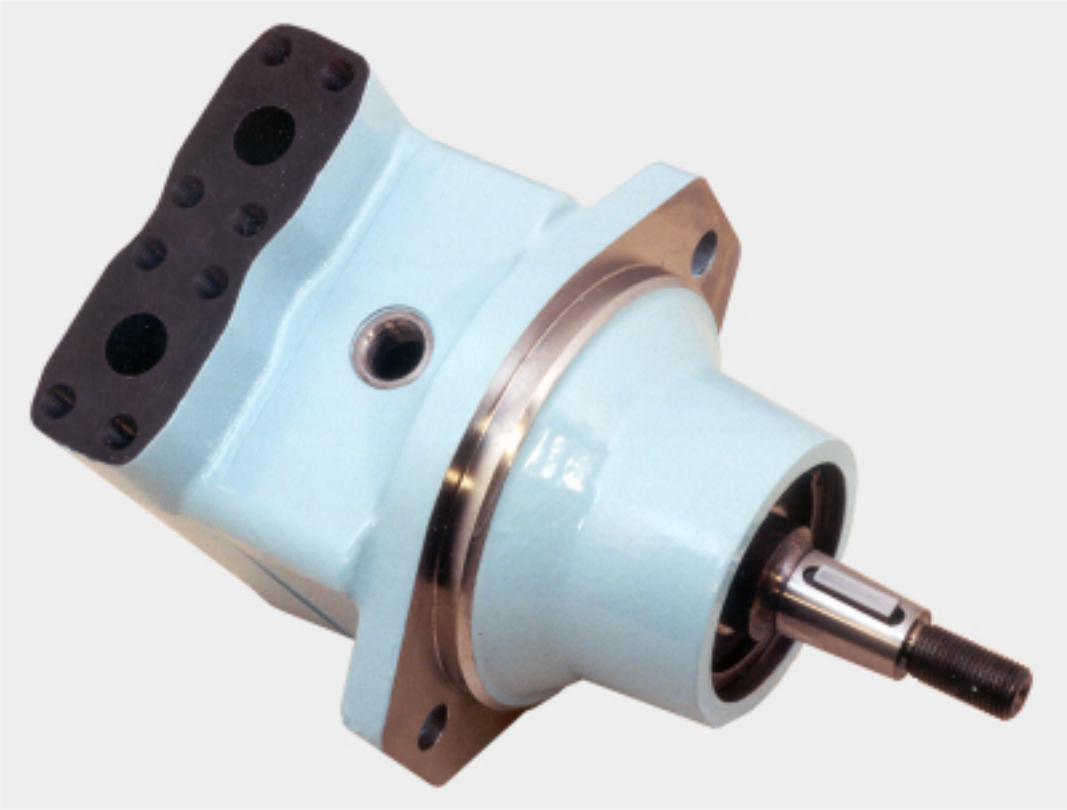

Publ. 2 - AM1702 - A 05 / 99 / 2500 / FB Replaces :

DENISON Hydraulics

LOW NOISE MOTOR

12 vanes and a patented cartridge design allow a very low noise level, whatever the speed.

HIGH PERFORMANCE MOTOR

The M5B series has been designed especially for severe duty applications wich require high pressure , high speed and low fluid lubricity.

Max. pressure (intermittent)	M5B* 012 to 036	: 4650 PSI
	M5B* 045	: 4060 PSI
Max. speed (intermittent, low loaded cond.)	M5B* 012 - 018	: 6000 RPM
	M5B* 028 - 036	: 4000 RPM
	M5B* 045	: 3000 RPM

HIGH EFFICIENCY

Up to 90 % overall at 4650 PSI.
Vane motors begin life with a high volumetric efficiency, and maintain that efficiency throughout their operating life.
Vane pin holdout design improves the mechanical efficiency at low pressure.

HIGH STARTING TORQUE

The high starting torque efficiency of the vane type motors allows them to start under high load without pressure overshoots, jerks and high instantaneous horsepower loads.

LOW TORQUE RIPPLE

This 12 vane type motor exhibits a very low torque ripple (typical ± 1,5%), even at low speeds.

HIGH LIFETIME

The vane, rotor and cam ring are pressure balanced to increase life over the full speed range. Double lip vanes reduce the sensitivity to fluid pollution.

INTERCHANGEABLE ROTATING GROUPS

Our precise manufacturing allows any component to be interchangeable.
Rotating groups may be easily replaced to renew the motor or change the displacement to suit altered requirements for speed or torque.

ROTATION AND DRAIN

The M5B-M5BS are bi-directional motors, externally drained.
The M5BF, externally drained, is available in three types of rotation : bi-directional, clockwise, counter-clockwise.
The M5BF1, internally drained, is available in two types of rotation : clockwise, and counter-clockwise.

CROSS PORT CHECK VALVE

The uni-directional M5BF and M5BF1 are designed with an internal valve that allows smooth dynamic braking, with a very simple hydraulic circuit and without risk of motor cavitation.

MOUNTING

M5B - M5BS : Cylindrical keyed or splined shaft according to SAE J744, ISO 3019-2 or J498b.
These products are designed primarily for coaxial drives which do not impose axial or side loading on the shaft.

M5BF : A stiff taper or cylindrical keyed shaft and a high load capacity double ball bearing allow the direct mounting on shaft (fan, ...).

<table>
<tr><th></th><th>Mounting flange</th><th>Ports</th><th>Drain</th><th>Shaft ends</th></tr>
<tr><td>M5B</td><td>ISO 3019-2
100 A2/B4 HW
(2/4 bolts - 3.94 DIA)</td><td rowspan="3">SAE 3/4"
4 bolts
UNC or
metric threads
(ISO/DIS 6162
SAE J518c)</td><td>M18 x .06</td><td rowspan="2">Keyed cyl. SAE "B"
or
Keyed cyl. ISO E 25M
or
Splined SAE "B"</td></tr>
<tr><td>M5BS</td><td>SAE "B" J744c
(2/4 bolts - 4.00 DIA)</td><td rowspan="2">M18 x .06
or
SAE 9/16"</td></tr>
<tr><td>M5BF</td><td>Special mounting
(2 bolts - 5.31 DIA)</td><td>Keyed taper non SAE
Keyed cyl. SAE "C"
Keyed cyl. ISO G32N</td></tr>
</table>

.

Back to Content

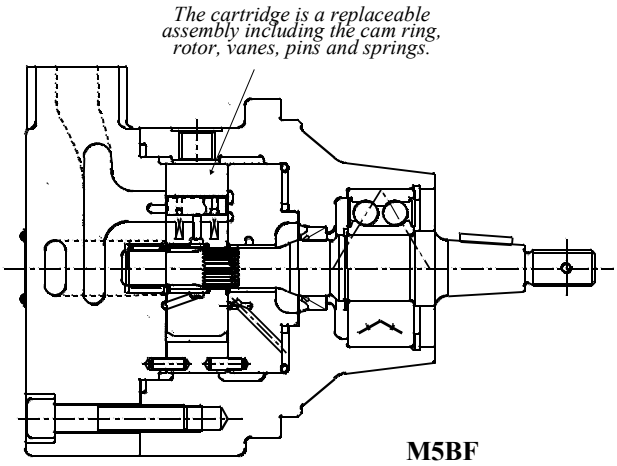

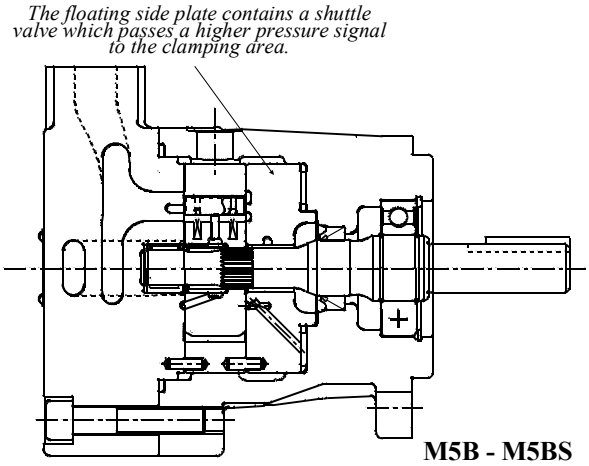

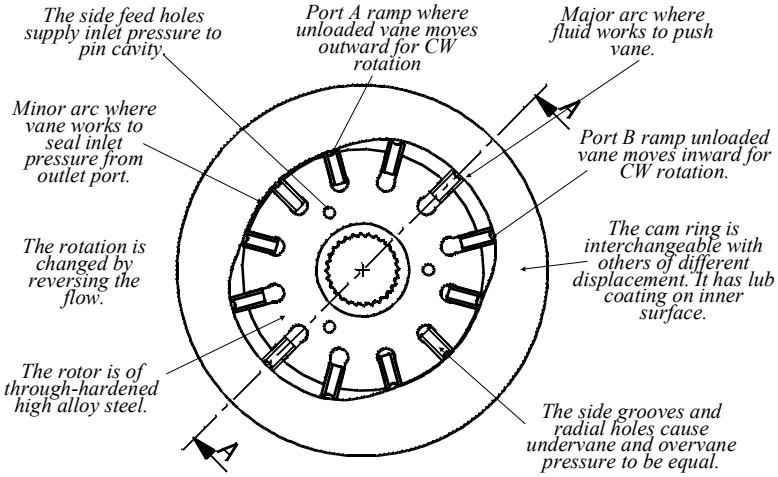

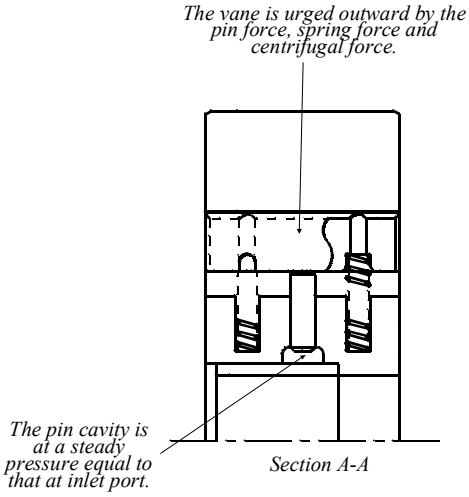

OPERATION - SINGLE CARTRIDGE

- The motor shaft is driven by the rotor. Vanes, closely fitted into the rotor slots move radially to seal against the cam ring. The ring has two major and two minor radial sections joined by transitional sections called ramps. These contours and the pressures exposed to them are balanced diametrically.
- Hydraulic pins and light springs urge the vanes radially against the cam contour assuring a seal at zero speed so that the motor can develop starting torque. The springs and pins are assisted by centrifugal force at higher speeds. Radial grooves and holes through the vanes equalize radial hydraulic forces on the vanes at all times. Fluid enters and leaves the motor cartridge through opening in the side plates at the ramps. Each motor port connects to two diametrically opposed ramps. Pressurized fluid entering at Port A torques the rotor clockwise. The rotor transports it to the ramp openings which connect to Port B from which it returns to the low pressure side of the system. Pressure at Port B torques the rotor counter-clockwise.
- The rotor is separated axially from the sideplate surfaces by the fluid film. The front sideplate is clamped against the cam ring by the pressure, maintains optimum clearance as dimensions change with temperature and pressure. A 3-way shuttle valve in the sideplate causes clamping pressure in Port A or B, whichever is the highest.
- Materials are chosen for long life efficiency. The vanes, rotor and cam ring are made out of hardened high alloy steels. Cast semi-steel sideplates are chemically etched to have a fine crystalline surface for good lubrication at start-up.

Back to Content

EXTERNAL DRAIN MOTOR

This motor may be alternately pressurized on ports A and B to 4650 PSI max. Whichever port is at low pressure, it should not be subjected to more than 60% of the high pressure, eg : When 4650 PSI in A, B is limited to 2900 PSI.

This motor must have a drain line connected to the center housing drain connection of sufficient size to prevent back pressure in excess of 50 PSI, and returned to the reservoir below the surface of the oil as far away as possible from the suction pipe of the pump.

INTERNAL DRAIN MOTOR

This unidirectional motor may be pressurized only on the port corresponding to its rotation type.
The outlet pressure must not be higher than 50 PSI.

RECOMMENDED FLUIDS

Petroleum base anti-wear R & O fluids (covered by DENISON HF-0 and HF-2 specifications).
Maximum catalog ratings and performance data are based on operation with these fluids.

FIRE RESISTANT FLUIDS

They are easily used in the M5B* motor. These include phosphate or organic ester fluids and blends, water-glycol solutions and water-oil invert emulsions.

ACCEPTABLE ALTERNATE FLUIDS

The use of fluids other than petroleum base anti-wear R & O fluids requires that the maximum ratings of the motor will be reduced. In some cases, the minimum replenishment pressure must be increased.

HF-1 : non antiwear petroleum base.
HF-3 : water in oil emulsion.
HF-4 : water glycols.
HF-5 : synthetic fluids.
Max. press. int. : 3500 PSI (HF-1, HF-4, HF-5)
2500 PSI (HF-3)
Max. press. cont. : 3000 PSI (HF-1, HF-4, HF-5)
2000 PSI (HF-3)
Max. speed : 1800 RPM (HF-3, HF-4, HF-5)

VISCOSITY

Max. (cold start, low speed and pressure) 4000 SUS
Max. (full speed and pressure) 500 SUS
Optimum (max. lifetime) 140 SUS
Min. (full speed and pressure, HF-1 fluid) 90 SUS
Min. (full speed and pressure, HF-0 & HF-2 fluids) 60 SUS
For cold starts, the motor should operate at low speed and pressure until fluid warms up to an acceptable viscosity for full power operation.

VISCOSITY INDEX

90 min.
Higher values extend the range of operating temperatures and lifetime.

TEMPERATURE

Max. fluid temperature (HF-0, HF-1 & HF-2) + 212° F
Min. fluid temperature (HF-0, HF-1 &HF-2) - 0.4° F

FLUID CLEANLINESS

The fluid must be cleaned before and during operation to maintain a contamination level of NAS 1638 class 8 (or ISO 18/14) or better. Filters with 25 micron (or better, ß10 ≥ 100) nominal ratings may be adequate but do not guarantee the required cleanliness levels.

WATER CONTAMINATION IN FLUID

Maximum acceptable content of water is :
- 0,10 % for mineral base fluids
- 0,05 % for synthetic fluids, crankcase oils, biodegradable fluids.

If amount of water is higher, then it should be drained off the circuit.

MINIMUM REPLENISHMENT PRESSURE (PSI ABSOLUTE)

	Speed [RPM] - Oil viscosity = 150 SUS				
	500	**1000**	**2000**	**3000**	**4000**
M5B*	20.3	24.7	39.1	60.9	87.0

The inlet port of the motor must be supplied with replenishment pressure as listed above to prevent cavitation during dynamic braking. This pressure should be multiplied by a coefficient of 1,5 when used with fire resistant fluids (HF-3, HF-4, HF-5).

Back to Content

Motor performances required

Torque	*T*	*[in.lbf]*	*970*
Speed	*n*	*[RPM]*	*1500*
Pump available data			
Flow	q_{Ve}	*[GPM]*	*14.5*
Pressure	*p*	*[PSI]*	*4060*

***1**. Check if available power is greater than required power (0.85 estimated overall efficiency).*

$$0.85 \ x \ \frac{q_{Ve} \ x \ p}{1714} \geq \frac{T \ x \ n}{63\,000} \qquad 0.85 \ x \ \frac{14.5 \ x \ 4060}{1714} \geq \frac{970 \ x \ 1500}{63\,000}$$

29.2 > 23.1 HP

<u>Two ways of calculation :</u> Calculate V_i from T required torque, or from q_{Ve} available flow

2a. $$V_i = \frac{2\pi \ x \ T}{p} = \frac{2\pi \ x \ 970}{4060} = 1.50 \ in^3/rev.$$

2b. $$V_i = \frac{231 \ x \ q_{Ve}}{n} = \frac{231 \ x \ 14.5}{1500} = 2.23 \ in^3/rev.$$

***3a**. Choose motor from V_i immediately greater*
M5B 028 : V_i = 1.71 in^3/rev.*

***3b**. Choose motor from V_i immediately smaller*
M5B 036 : V_i = 2.20 in^3/rev.*

***4a**. Check theoretical motor pressure*

$$p = \frac{2\pi \ x \ T}{V_i} = \frac{2\pi \ x \ 970}{1.71} = 3560 \ PSI$$

Torque loss at this pressure = 85 in.lbf (See page 6)
Calculate real pressure

$$p = \frac{2\pi \ x \ (T + Tl)}{V_i} = \frac{2\pi \ x \ 1055}{1.71} = 3880 \ PSI$$

***4b.** Check theoretical motor press. with T = 970 in.lbf*

$$p = \frac{2\pi \ x \ T}{V_i} = \frac{2\pi \ x \ 970}{2.20} = 2770 \ PSI$$

Torque loss at this pressure = 70 in.lbf (See page 6)
Calculate real pressure

$$p = \frac{2\pi \ x \ (T + Tl)}{V_i} = \frac{2\pi \ x \ 1040}{2.20} = 2970 \ PSI$$

***5a.** Flow loss at this pressure : 1.3 GPM (See page 6)*
Real flow used by the motor :
14.5 - 1.3 = 13.2 GPM

***5b.** Flow loss at this pressure : 1.1 GPM (See page 6)*
Real flow used by the motor :
14.5 - 1.1 = 13.4 GPM

***6a.** Real speed of the motor :*

$$n = \frac{q_V \ x \ 231}{V_i} = \frac{13.2 \ x \ 231}{1.71} = 1780 \ RPM$$

***6b.** Real speed of the motor :*

$$n = \frac{q_V \ x \ 231}{V_i} = \frac{13.4 \ x \ 231}{2.20} = 1410 \ RPM$$

Real performances
V_i = 1.71 in^3/rev.
n = 1780 RPM
T = 970 in.lbf
p = 3880 PSI

Real performances
V_i = 2.20 in^3/rev.
n = 1410 RPM
T = 970 in.lbf
p = 2970 PSI

In each case always choose the smallest motor which will operate at the highest speed and pressure, and will offer the most efficient solution.

FLUID POWER FORMULAS

Volumetric efficiency

$$\frac{1}{1 + \frac{total \ leakage \ x \ 231}{speed \ x \ displacement}}$$

Mechanical efficiency

$$1 - \frac{torque \ loss \ x \ 2\pi}{\Delta \ pressure \ x \ displacement}$$

Fluid motor speed — *RPM*

$$\frac{231 \ x \ flow \ rate}{displacement} \ x \ volumetric \ eff.$$

Fluid motor torque — *in.lbf*

$$\frac{\Delta \ pressure \ x \ displacement}{2\pi} \ x \ mech. \ eff.$$

Fluid motor power — *HP*

$$\frac{speed \ x \ displacement \ x \ \Delta \ pressure}{395934} \ x \ overall \ eff.$$

HP

$$\frac{torque \ x \ speed}{63\,000}$$

Speed	*[RPM]*
Displacement	*[in^3/rev]*
Δ pressure	*[PSI]*
Flow rate	*[GPM]*
Leakage	*[GPM]*
Torque	*[in.lbf]*
Torque loss	*[in.lbf]*

Back to Content

Series	Cartridge	Theoretical displacement	Theoretical torque	Theoretical power at 100 RPM	Typical data 2000 RPM - 4650 PSI	
		in^3/rev	in-lbf/PSI	HP/100 PSI	in/lbf	HP
M5B*	012	0.73	0,116	0,0184	447.8	14.2
	018	1.10	0,175	0,0278	718.6	22.8
	028	1.71	0,272	0,0432	1169.0	37.1
	036	2.20	0,350	0,0536	1529.2	48.5
	045	2.75	0,437	0,0694	1681.4[1)]	53.4[1)]

[1)] 045 = 4060 PSI max.

OVERALL LEAKAGE (internal + external)

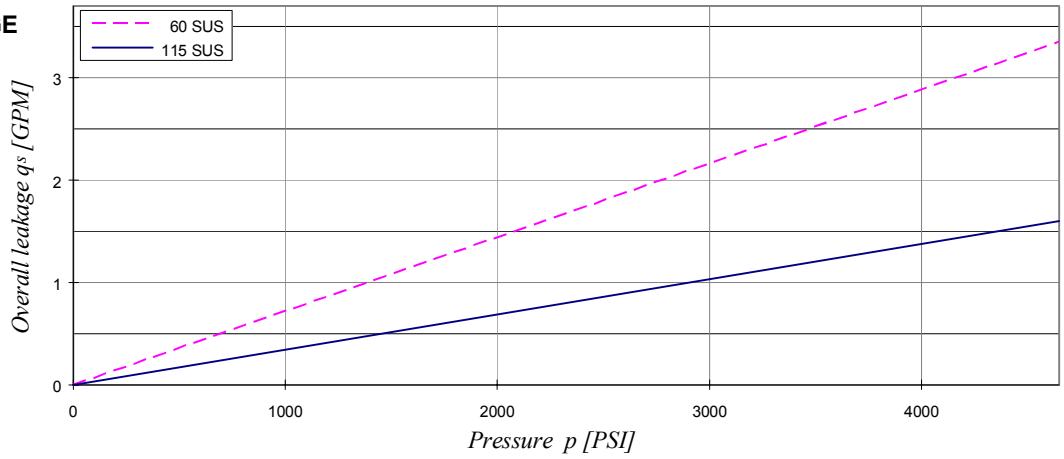

TORQUE LOSS

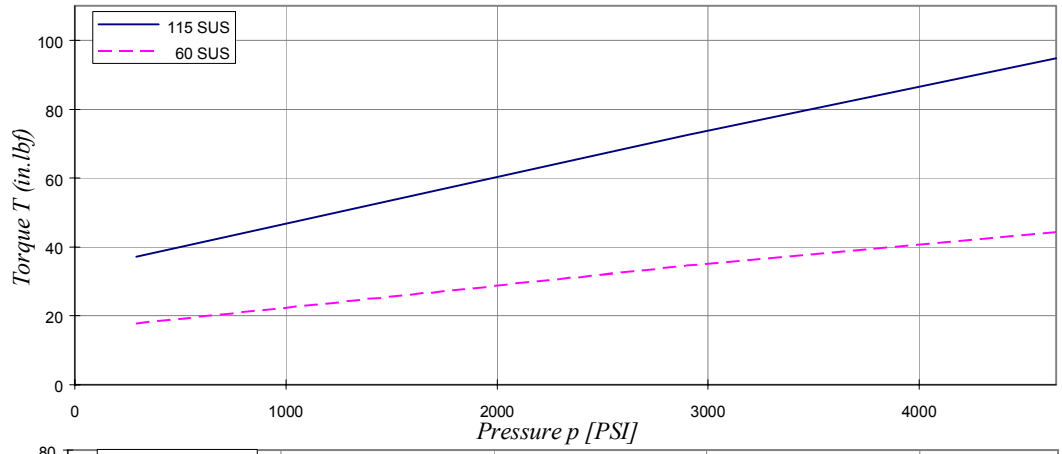

LP NOISE M5BF - 036

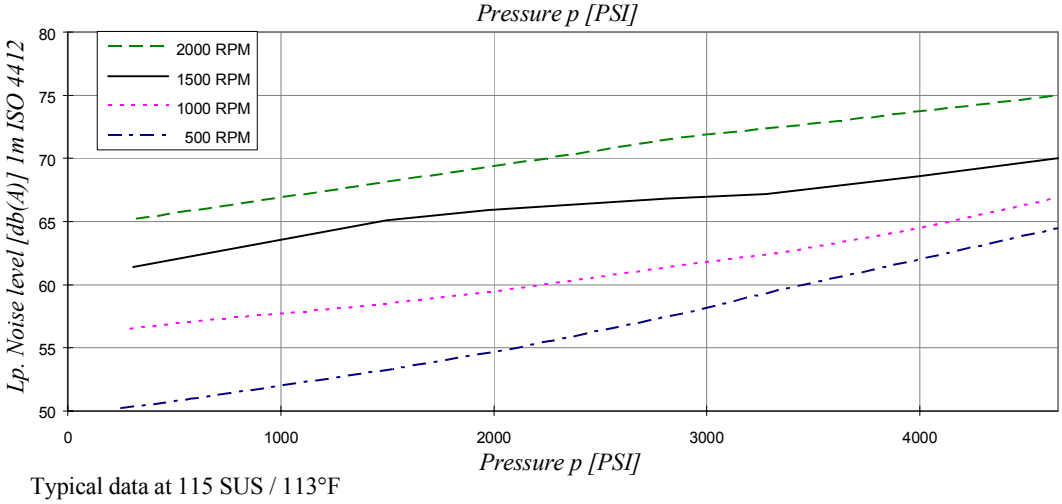

STARTING PERFORMANCES

Typical data at 115 SUS / 113°F

Maximum cross-flow 1450 PSI : 0.47 GPM
2900 PSI : 2.06 GPM
4650 PSI : 3.30 GPM

Minimum stalled torque efficiency 1450 PSI : 78.3 %
2900 PSI : 81.0 %
4650 PSI : 80.8 %

Back to Content

012 & 018

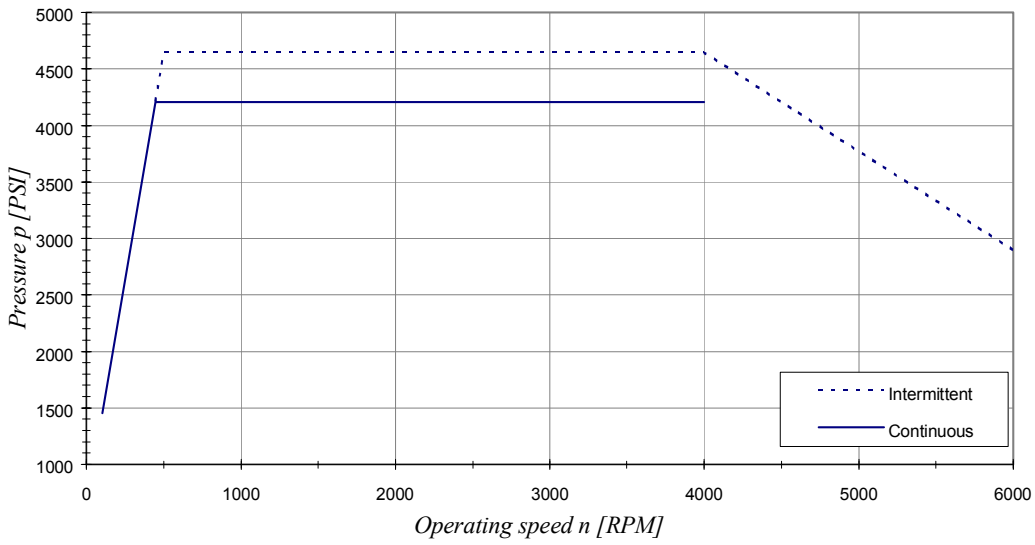

028 & 036

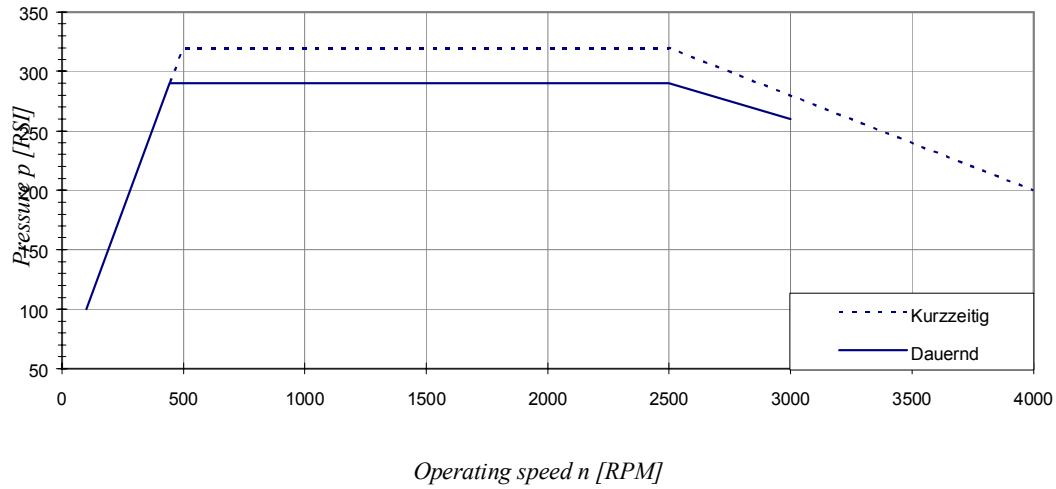

045

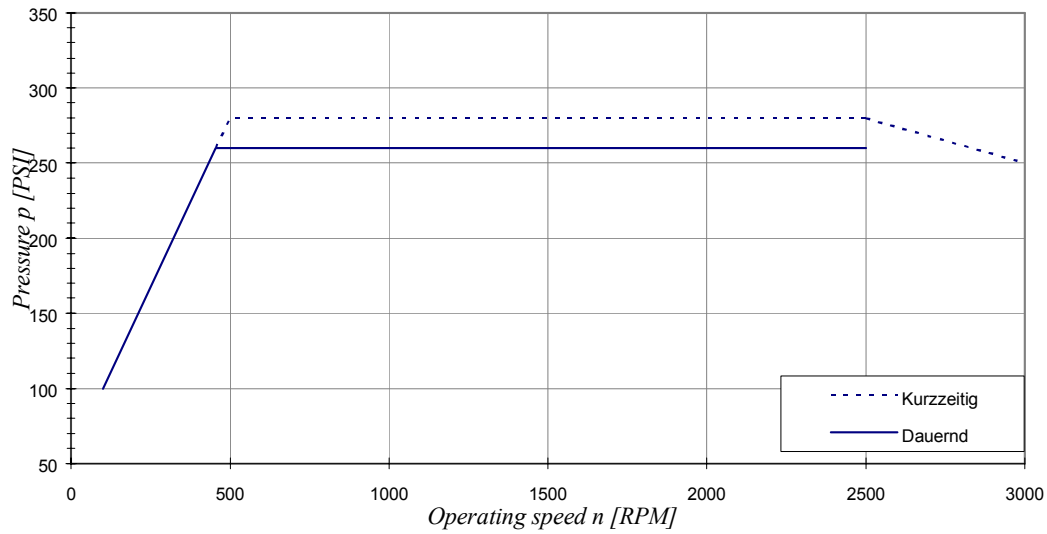

- These are running condition limits ; for starting performances see page 6.
- Intermittent conditions : do not exceed 6 seconds per minute of rotation.
- Typical curves, at 115 SUS / 113° F.
- For higher specifications or for operating speed under 100 RPM, please consult our technical department.

Back to Content

Model No. **M5B* - 028 - 1 N 02 - A 1 M 3 -**

Series M5B :
Mounting flange
ISO 3019-2 - 100 A2/B4HW

Series M5BS :
Mounting flange SAE "B" - J744c

Cam ring
Volumetric displacement
012 = .73 in^3/rev
018 = 1.10 in^3/rev
028 = 1.71 in^3/rev
036 = 2.20 in^3/rev
045 = 2.75 in^3/rev

Type of shaft
1 = keyed (SAE B - J744c)
2 = keyed (ISO E25M - 3019 -2)
3 = splined (SAE B - J498b)

Direction of rotation (view on shaft end)
N = bi-directional

Modifications

Drain variables
M5B :
3 = M18 x .06 metric drain

M5BS :
2 = 9/16" SAE drain
3 = M18 x .06 metric drain

Port variables
0 = 3/4" SAE 4 bolts - J518c - UNC thread
M =3/4" SAE 4 bolts - J518c - metric thread

Seal class
1 = S1 BUNA N
5 = S5 VITON

Design letter

Porting combination
See hereunder

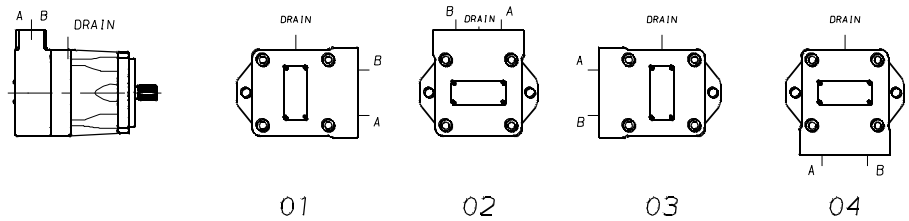

View from shaft end :
CW rotation A = inlet
B = outlet
CCW rotation A = outlet
B = inlet

PERMISSIBLE AXIAL AND RADIAL LOADS

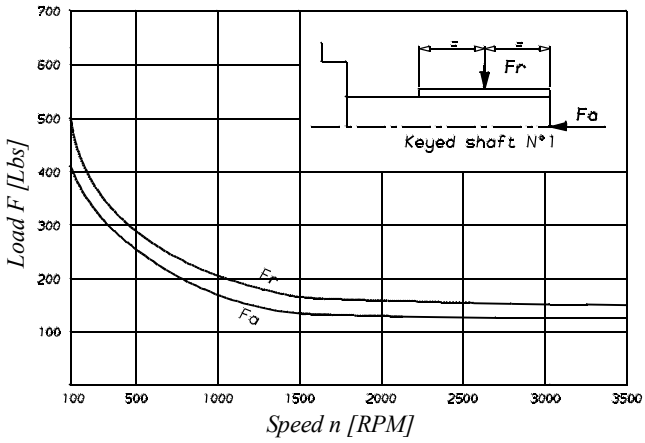

Back to Content

DIMENSIONS - Weight : 40.8 lbs - M5B - M5BS SERIES

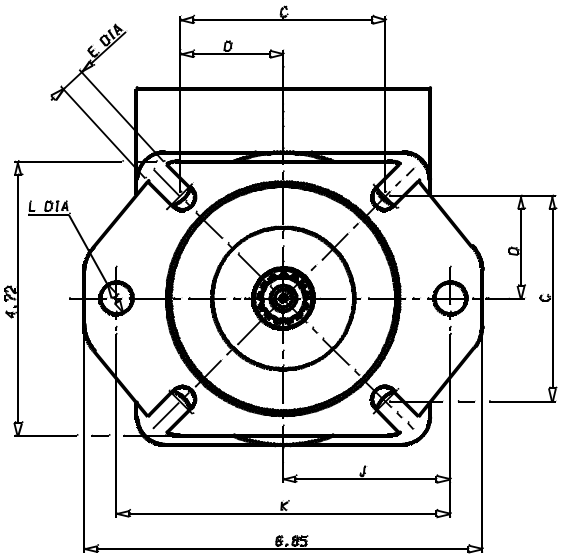

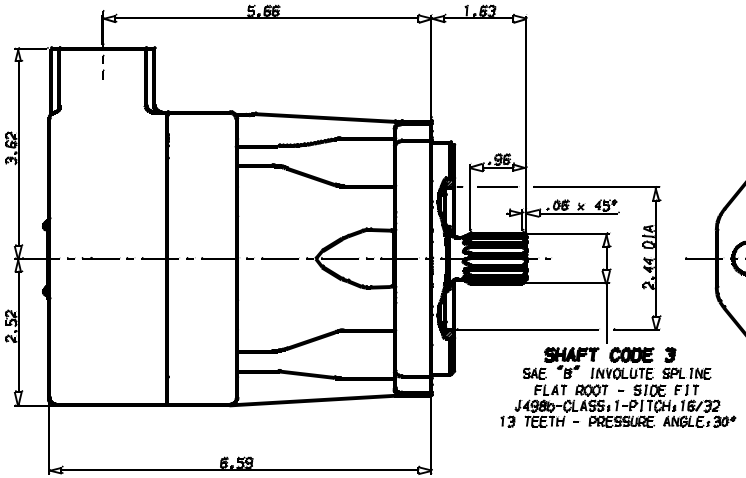

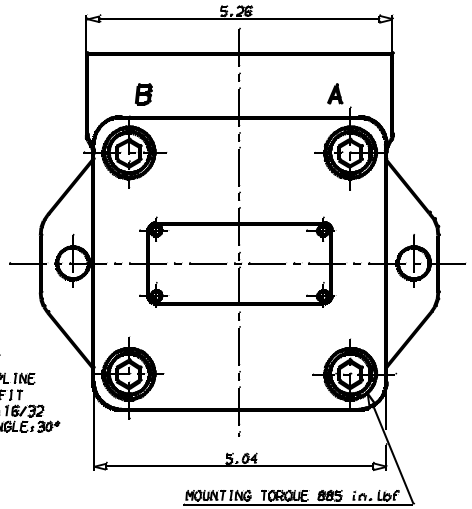

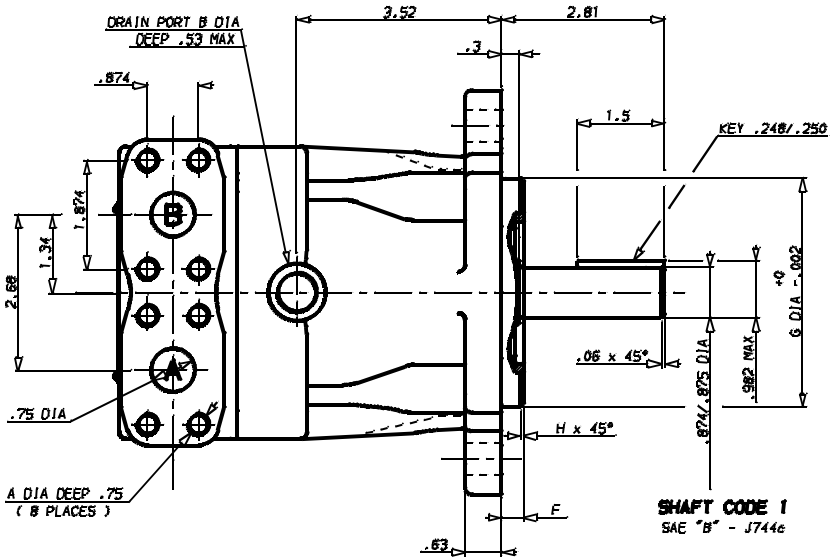

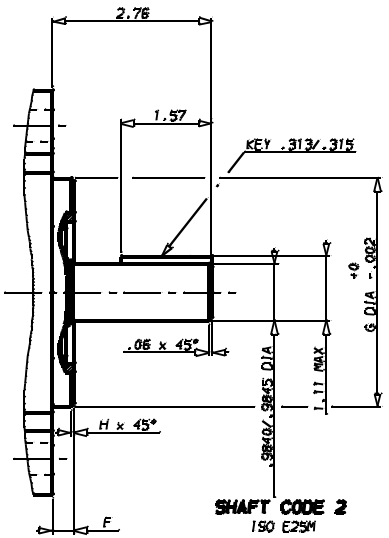

	M5BS		M5B	
Port code	**0**	**M**	**0**	**M**
A DIA	3/8" - 16 UNC	M10	3/8" - 16 UNC	M10
Drain code	**2**	**3**	**3**	
B DIA	SAE9/16" - 18	M18 x .06	M18 x .06	
C	3.53		3.48	
D	1.77		1.74	
E DIA	.56		.43	
F	.38		.35	
G DIA	4.00		3.94	
H	.06		.08	
J	2.87		2.75	
K	5.74		5.51	
L DIA	.56		.55	

Back to Content

Model No. **M5BF1 - 028 - 1 N 02 - A 1 M 3 -**

Series external drain
Series internal drain

Cam ring
Volumetric displacement
012 = .73 in^3/rev
018 = 1.10 in^3/rev
028 = 1.71 in^3/rev
036 = 2.20 in^3/rev
045 = 2.75 in^3/rev

Type of shaft
1 = keyed taper (non SAE)
2 = keyed (SAE C - J744c)
W = keyed (ISO G32N)

Direction of rotation (view on shaft end)

M5BF :
N = bi-directional
R = clockwise
L = counter-clockwise

M5BF1 :
R = clockwise
L = counter-clockwise

Modifications

Drain variables

M5BF :
2 = 9/16" SAE drain
3 = M18 x .06 metric drain

M5BF1 :
X = no drain connection

Port variables

M5BF :
0 = 3/4" SAE 4 bolts - J518c - UNC thread
M =3/4" SAE 4 bolts - J518c - metric thread

M5BF1 :
M =3/4" SAE 4 bolts - J518c - metric thread

Seal class
1 = S1 BUNA N
5 = S5 VITON

Design letter

Porting combination
See hereunder

PORTING COMBINATION

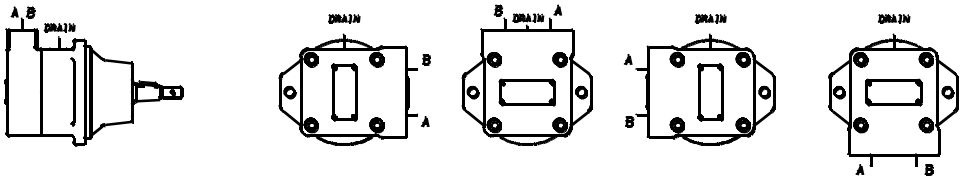

01 02 03 04

ROTATIONS

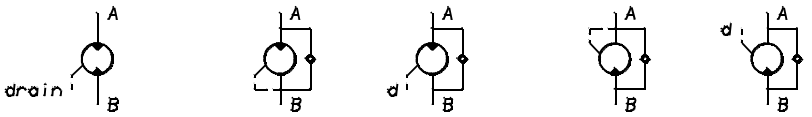

View from shaft end :

CW rotation	A = inlet B = outlet
CCW rotation	A = outlet B = inlet

PERMISSIBLE AXIAL AND RADIAL LOADS

1 - Max. axial load : Fa max. = 1350 lbs

2 - Max. radial load cylindrical shaft : Fr max. = 1800 lbs

taper shaft : Fr max. = 1250 lbs

3 - Theoretical lifetime [hour] : $L_{10H}\ [Hour] = \frac{16\,666}{N\ [rpm]} \times L_{10}$

4 - Theoretical lifetime [10^6 rev] : L_{10}

5 - Eg of theoretical life time calculation

Axial load	Fa = 450 lbs
Radial load	Fr = 225 lbs
Operating speed	N = 2000 RPM

L_{10} = 2000 [10^6 rev] (see on curve)

$$L_{10H} = \frac{16\,666}{2000} \times 2000$$

L_{10H} = 16 666 hours.

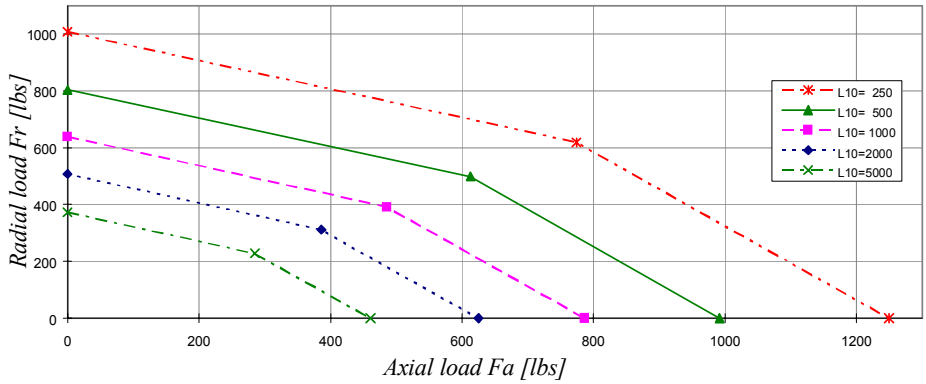

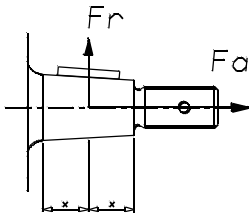

Back to Content

DIMENSIONS - Weight : 40.8 lbs - M5BF SERIES

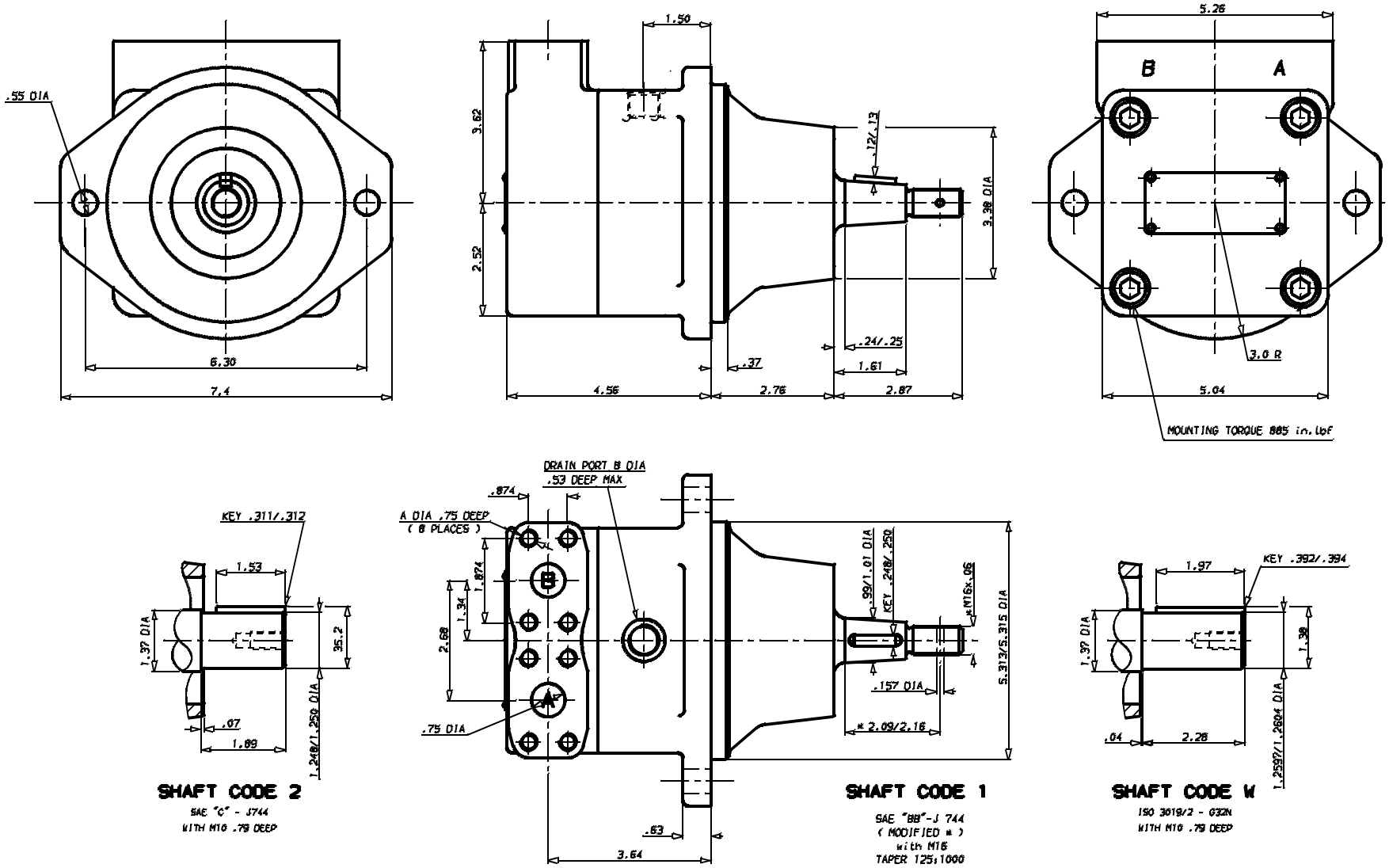

	M5BF		M5BF1
Port code	**0**	**M**	**M**
A DIA	3/8" - 16 UNC	M10	M10
Drain code	**2**	**3**	**X**
B DIA	SAE 9/16"-18	M18 x .06	no drain connection

Back to Content